UNIVERSITY OF CAMBRIDGE INTERNATIONAL EXAMINATIONS
General Certificate of Education
Advanced Subsidiary Level and Advanced Level

PHYSICS **9702/12**

Paper 1 Multiple Choice **October/November 2010**

1 hour

Additional Materials: Multiple Choice Answer Sheet
Soft clean eraser
Soft pencil (type B or HB is recommended)

7112542022

READ THESE INSTRUCTIONS FIRST

Write in soft pencil.
Do not use staples, paper clips, highlighters, glue or correction fluid.
Write your name, Centre number and candidate number on the Answer Sheet in the spaces provided unless this has been done for you.

There are **forty** questions on this paper. Answer **all** questions. For each question there are four possible answers **A**, **B**, **C** and **D**.
Choose the **one** you consider correct and record your choice in **soft pencil** on the separate Answer Sheet.

Read the instructions on the Answer Sheet very carefully.

Each correct answer will score one mark. A mark will not be deducted for a wrong answer.
Any working should be done in this booklet.

IB10 11_9702_12/3RP
© UCLES 2010

Data

speed of light in free space,	$c = 3.00 \times 10^{8}\,\text{m s}^{-1}$
permeability of free space,	$\mu_0 = 4\pi \times 10^{-7}\,\text{H m}^{-1}$
permittivity of free space,	$\varepsilon_0 = 8.85 \times 10^{-12}\,\text{F m}^{-1}$
elementary charge,	$e = 1.60 \times 10^{-19}\,\text{C}$
the Planck constant,	$h = 6.63 \times 10^{-34}\,\text{J s}$
unified atomic mass constant,	$u = 1.66 \times 10^{-27}\,\text{kg}$
rest mass of electron,	$m_\text{e} = 9.11 \times 10^{-31}\,\text{kg}$
rest mass of proton,	$m_\text{p} = 1.67 \times 10^{-27}\,\text{kg}$
molar gas constant,	$R = 8.31\,\text{J K}^{-1}\,\text{mol}^{-1}$
the Avogadro constant,	$N_\text{A} = 6.02 \times 10^{23}\,\text{mol}^{-1}$
the Boltzmann constant,	$k = 1.38 \times 10^{-23}\,\text{J K}^{-1}$
gravitational constant,	$G = 6.67 \times 10^{-11}\,\text{N m}^2\,\text{kg}^{-2}$
acceleration of free fall,	$g = 9.81\,\text{m s}^{-2}$

© UCLES 2010

Formulae

uniformly accelerated motion, $s = ut + \frac{1}{2}at^2$

$v^2 = u^2 + 2as$

work done on/by a gas, $W = p\Delta V$

gravitational potential, $\phi = -\frac{Gm}{r}$

hydrostatic pressure, $p = \rho gh$

pressure of an ideal gas, $p = \frac{1}{3}\frac{Nm}{V}\langle c^2 \rangle$

simple harmonic motion, $a = -\omega^2 x$

velocity of particle in s.h.m., $v = v_0 \cos \omega t$

$v = \pm \omega \sqrt{x_0^2 - x^2}$

electric potential, $V = \frac{Q}{4\pi\varepsilon_0 r}$

capacitors in series, $1/C = 1/C_1 + 1/C_2 + \ldots$

capacitors in parallel, $C = C_1 + C_2 + \ldots$

energy of charged capacitor, $W = \frac{1}{2}QV$

resistors in series, $R = R_1 + R_2 + \ldots$

resistors in parallel, $1/R = 1/R_1 + 1/R_2 + \ldots$

alternating current/voltage, $x = x_0 \sin \omega t$

radioactive decay, $x = x_0 \exp(-\lambda t)$

decay constant, $\lambda = \frac{0.693}{t_{\frac{1}{2}}}$

© UCLES 2010

[Turn over

1 Which row shows a base quantity with its correct SI unit?

	quantity	unit
A	current	A
B	mass	g
C	temperature	°C
D	weight	N

2 The frictional force F on a sphere falling through a fluid is given by the formula

$$F = 6\pi a\eta v$$

where a is the radius of the sphere, η is a constant relating to the fluid and v is the velocity of the sphere.

What are the units of η?

A kg m s^{-1} **B** $\text{kg m}^{-1}\text{ s}^{-1}$ **C** kg m s^{-3} **D** $\text{kg m}^{3}\text{ s}^{-3}$

3 What is the component of this displacement vector in the direction XY?

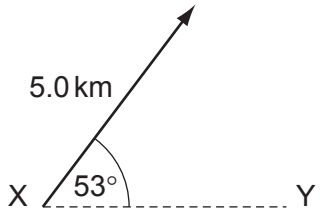

A 3.0 km **B** 4.0 km **C** 5.0 km **D** 6.6 km

Space for working

4 A metre rule is used to measure the length of a piece of wire. It is found to be 70 cm long to the nearest millimetre.

How should this result be recorded in a table of results?

A 0.7 m **B** 0.70 m **C** 0.700 m **D** 0.7000 m

5 A quantity x is to be determined from the equation

$$x = P - Q.$$

P is measured as 1.27 ± 0.02 m.

Q is measured as 0.83 ± 0.01 m.

What is the percentage uncertainty in x to one significant figure?

A 0.4 % **B** 2 % **C** 3 % **D** 7 %

6 A football is dropped from the top of a three-storey building. It falls through air until it reaches the ground.

What remains constant throughout the fall?

A acceleration of the football

B air resistance on the football

C velocity of the football

D weight of the football

Space for working

7 A student throws a ball in the positive direction vertically upwards.

The ball makes an elastic collision with the ceiling, rebounds and accelerates back to the student's hand in a time of 1.2 s.

Which graph best represents the acceleration of the ball from the moment it leaves the hand to the instant just before it returns to the hand?

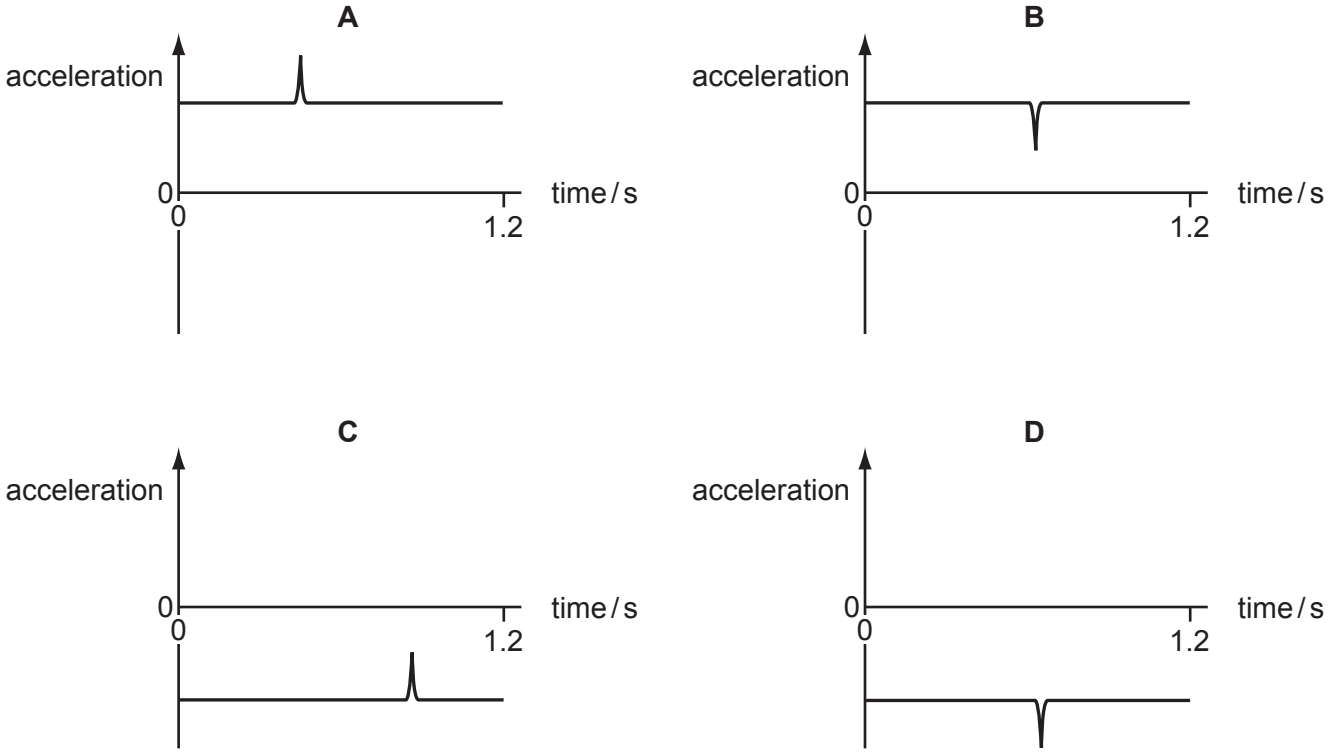

Space for working

8 A moving body undergoes uniform acceleration while travelling in a straight line between points X, Y and Z. The distances XY and YZ are both 40 m. The time to travel from X to Y is 12 s and from Y to Z is 6.0 s.

What is the acceleration of the body?

A $0.37\,m\,s^{-2}$ **B** $0.49\,m\,s^{-2}$ **C** $0.56\,m\,s^{-2}$ **D** $1.1\,m\,s^{-2}$

9 A particle of mass $2m$ and velocity v strikes a wall.

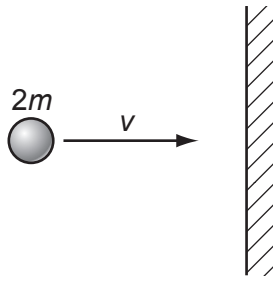

The particle rebounds along the same path after colliding with the wall. The collision is inelastic.

What is a possible change in the momentum of the ball during the collision?

A mv **B** $2mv$ **C** $3mv$ **D** $4mv$

10 Which defines the weight of a body?

A the amount of matter in the body

B the force of gravity on the body

C the number of particles in the body

D the product of the body's volume and density

Space for working

11 The diagram shows a rope bridge that a student makes on an adventure training course. The student has a weight *W*.

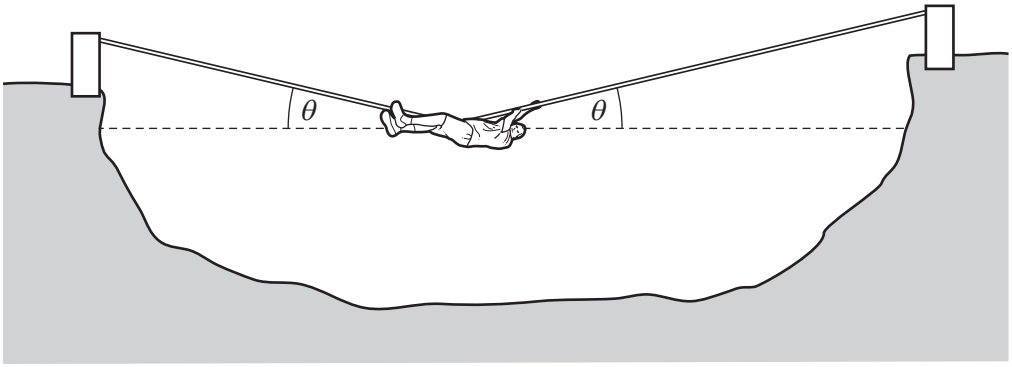

Which formula gives the tension *T* in the rope?

A $T = \frac{W}{2\cos\theta}$ **B** $T = \frac{W}{2\sin\theta}$ **C** $T = \frac{W}{\cos\theta}$ **D** $T = \frac{W}{\sin\theta}$

12 A spanner is used to tighten a nut as shown.

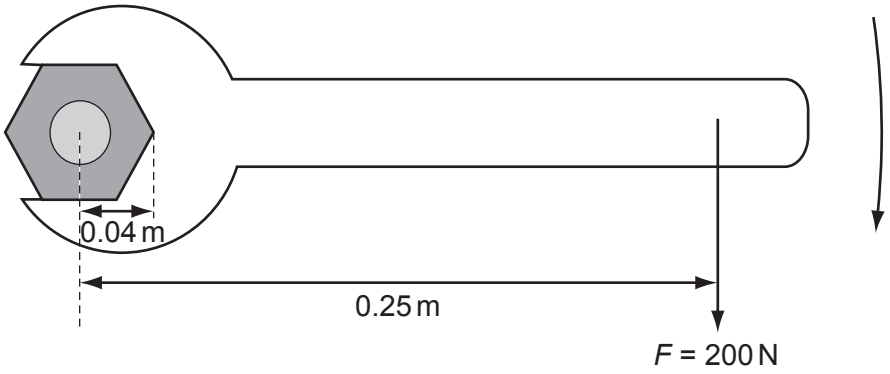

A force *F* is applied at right-angles to the spanner at a distance of 0.25 m from the centre of the nut. When the nut is fully tightened, the applied force is 200 N.

What is the resistive torque, in an anticlockwise direction, preventing further tightening?

A 8 N m **B** 42 N m **C** 50 N m **D** 1250 N m

Space for working

© UCLES 2010

13 The diagrams show a metal cube suspended from a spring balance before and during immersion in water.

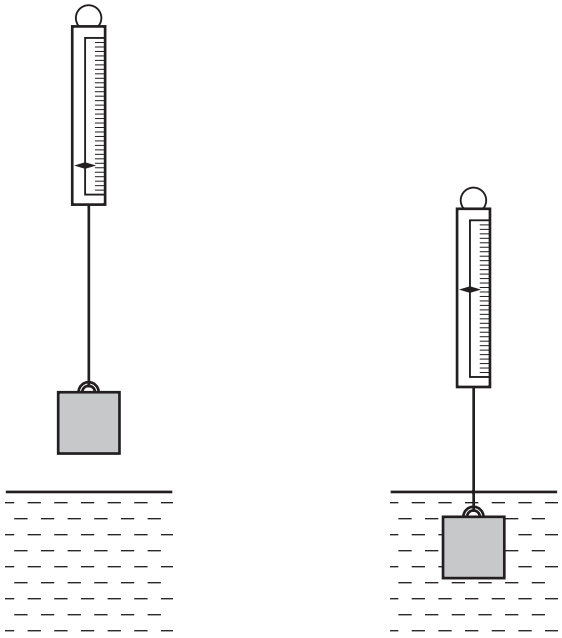

A reduction in the balance reading occurs as a consequence of the immersion.

Which statement is correct?

A The balance reading will be further reduced if the cube is lowered further into the water.

B The balance reading during immersion corresponds to the upthrust of the water on the cube.

C The forces acting on the vertical sides of the cube contribute to the change in the balance reading.

D The gravitational pull on the cube is unchanged by the immersion.

Space for working

14 A box of weight 200 N is pushed so that it moves at a steady speed along a ramp, through a height of 1.5 m. The ramp makes an angle of 30° with the ground. The frictional force on the box is 150 N while the box is moving.

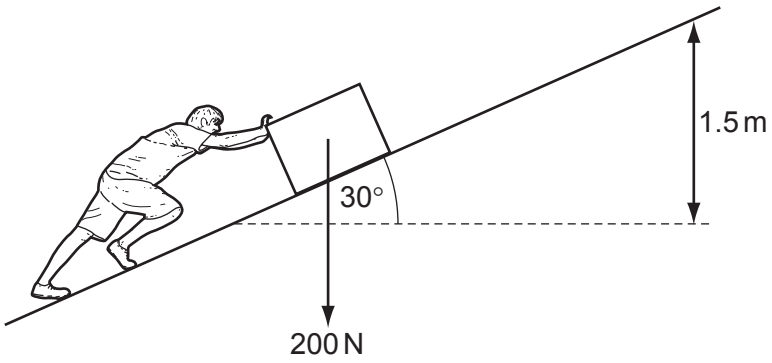

What is the work done by the person?

A 150 J **B** 300 J **C** 450 J **D** 750 J

15 A raindrop of mass m is falling vertically through the air with a steady speed v. The raindrop experiences a retarding force kv due to the air, where k is a constant. The acceleration of free fall is g.

Which expression gives the kinetic energy of the raindrop?

A $\frac{mg}{k}$ **B** $\frac{mg^2}{2k^2}$ **C** $\frac{m^3g^2}{k^2}$ **D** $\frac{m^3g^2}{2k^2}$

Space for working

© UCLES 2010

16 The kinetic energy of a vehicle of mass 1000 kg is 4.5×10^5 J. It is stopped by applying a constant braking force of 6000 N.

What is its stopping distance?

A 37 m **B** 75 m **C** 150 m **D** 300 m

17 What are units of work, energy and power?

	work	energy	power
A	J	N m	J
B	$J s^{-1}$	J	$J s^{-1}$
C	N m	N m	W
D	N m	W	W

18 Below are four short paragraphs describing the molecules in a beaker of water at 50 °C.

Which paragraph correctly describes the molecules?

A The molecules all travel at the same speed. This speed is not large enough for any of the molecules to leave the surface of the water. There are attractive forces between the molecules.

B The molecules have a range of speeds. Some molecules travel sufficiently fast to leave the surface of the water. There are no forces between the molecules.

C The molecules have a range of speeds. Some molecules travel sufficiently fast to leave the surface of the water. There are attractive forces between the molecules.

D The molecules have a range of speeds. The fastest molecules are unable to leave the surface of the water. There are attractive forces between the molecules.

Space for working

© UCLES 2010

19 Which group of materials contains two polymers?

A	copper	sand	polystyrene
B	glass	wood	aluminium
C	nylon	sugar	rubber
D	stone	diamond	steel

20 The pressure at sea level is approximately 100 000 Pa. The density of sea water is 1030 kg m^{-3}.

What is the approximate pressure 80 m below the surface of the sea?

A 100 000 Pa **B** 180 000 Pa **C** 800 000 Pa **D** 900 000 Pa

21 Two wires P and Q are made from the same material.

Wire P is initially twice the diameter and twice the length of wire Q. The same force, applied to each wire, causes the wires to extend elastically.

What is the ratio of the extension in P to that in Q?

A $\frac{1}{2}$ **B** 1 **C** 2 **D** 4

Space for working

© UCLES 2010

22 To determine the mass of food in a pan, a scale is used that has high sensitivity for small masses but low sensitivity for large masses.

To do this, two springs are used, each with a different spring constant *k*. One of the springs has a low spring constant and the other has a high spring constant.

Which arrangement of springs would be suitable?

A

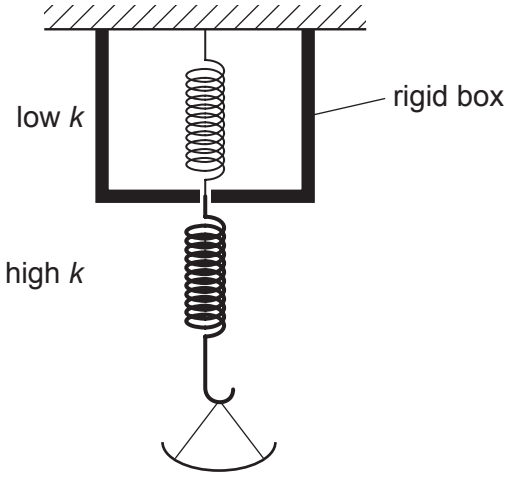

B

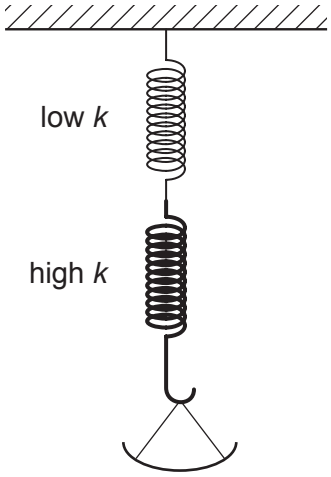

C

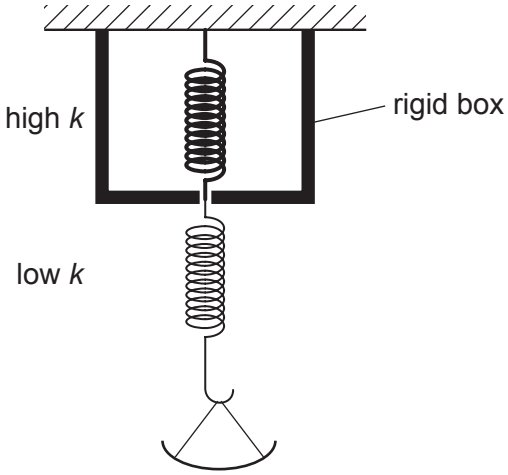

D

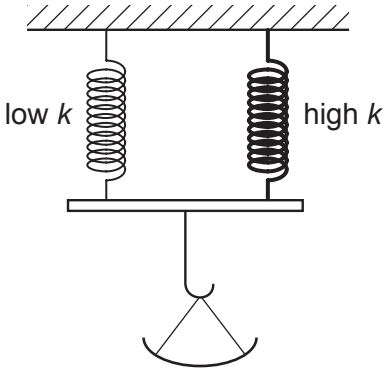

Space for working

23 The amplitude of a wave is A and its intensity is I.

Which amplitude is necessary for the intensity to be doubled to $2I$?

A A^2 **B** $\sqrt{A}$ **C** $\sqrt{2}\,A$ **D** $2A$

24 Which value is a possible wavelength for radiation in the ultra-violet region of the electromagnetic spectrum?

A 3×10^{-2} m **B** 3×10^{-5} m **C** 3×10^{-8} m **D** 3×10^{-10} m

25 The diagram shows two tubes.

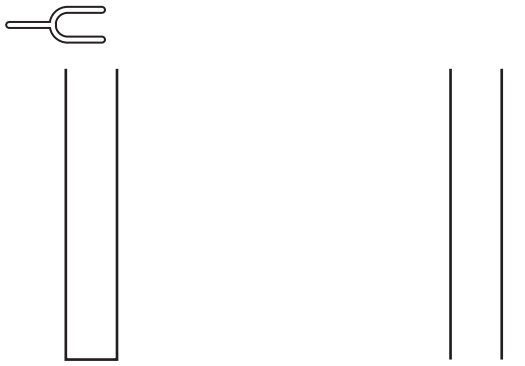

The tubes are identical except tube X is closed at its lower end while tube Y is open at its lower end. Both tubes have open upper ends.

A tuning fork placed above tube X causes resonance of the air at frequency f. No resonance is found at any **lower** frequency than f with tube X.

Which tuning fork will produce resonance when placed just above tube Y?

A a fork of frequency $\frac{f}{2}$

B a fork of frequency $\frac{2f}{3}$

C a fork of frequency $\frac{3f}{2}$

D a fork of frequency $2f$

Space for working

© UCLES 2010

26 A microwave transmitter emits waves towards a metal plate. The waves strike the plate and are reflected back along their original path.

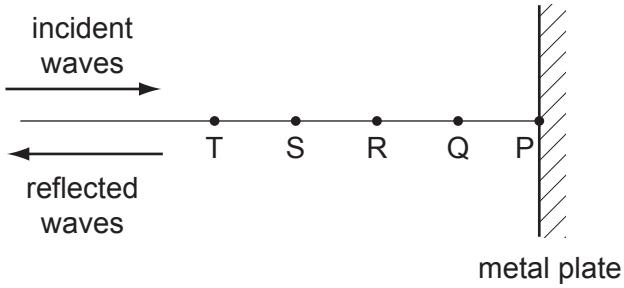

A microwave detector is moved along the line PT.

Points P, Q, R, S and T are the positions where minima of intensity are observed. These points are found to be 15 mm apart.

What is the frequency of the microwaves?

A 5.0 GHz **B** 6.7 GHz **C** 10 GHz **D** 20 GHz

27 A double slit experiment, using light of wavelength 600 nm, results in fringes being produced on a screen. The fringe separation is found to be 1.0 mm.

When the distance between the double slits and the viewing screen is increased **by** 2.0 m, the fringe separation increases **to** 3.0 mm.

What is the separation of the double slits producing the fringes?

A 0.4 mm **B** 0.6 mm **C** 0.9 mm **D** 1.2 mm

Space for working

© UCLES 2010

28 The diagram shows a vertical uniform electric field in a vacuum.

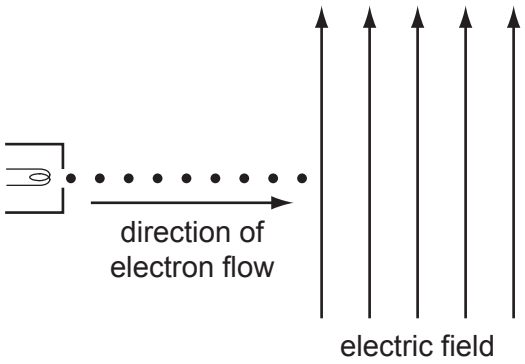

An electron gun injects a beam of electrons horizontally into the field.

Which changes, if any, have occurred to the path and speed of the electrons by the time the beam leaves the field?

	path of electrons	speed of electrons
A	deflected downwards	increased
B	deflected downwards	unchanged
C	deflected upwards	increased
D	deflected upwards	unchanged

Space for working

© UCLES 2010

29 A very small oil drop of mass m carries a charge $+q$.

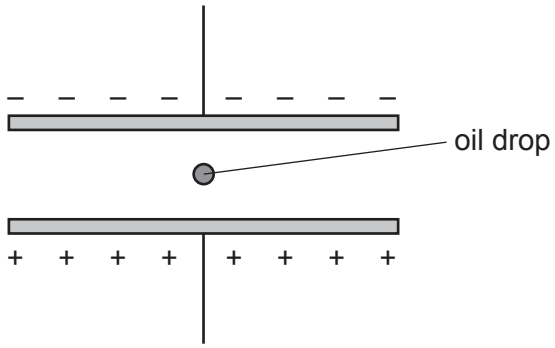

The potential difference across the plates is V and the separation is d.

The weight of the drop is balanced by the electric force. (Buoyancy forces may be considered to be negligible.)

Which formula gives the charge on the drop?

A $q = \frac{mgd}{V}$ **B** $q = \frac{mgV}{d}$ **C** $q = \frac{Vd}{mg}$ **D** $q = \frac{V}{mgd}$

30 Which electrical component is represented by the following symbol?



A a diode

B a potentiometer

C a resistor

D a thermistor

Space for working

31 When there is **no current** in a wire, which statement about the conduction electrons in that wire is correct?

A Electrons in the wire are moving totally randomly within the wire.

B Equal numbers of electrons move at the same speed, but in opposite directions, along the wire.

C No current is flowing therefore the electrons in the wire are stationary.

D No current is flowing therefore the electrons in the wire are vibrating around a fixed point.

32 A high-resistance voltmeter connected across a battery reads 6.0 V.

When the battery is connected in series with a lamp of resistance of 10 Ω, the voltmeter reading falls to 5.6 V.

Which statement explains this observation?

A The electromotive force (e.m.f.) of the battery decreases because more work is done across its internal resistance.

B The e.m.f. of the battery decreases because work is done across the lamp.

C The potential difference (p.d.) across the battery decreases because more work is done across its internal resistance.

D The p.d. across the battery decreases because work is done across the lamp.

Space for working

© UCLES 2010

33 A battery of e.m.f. 12 V and internal resistance 2.0 Ω is connected in series with an ammeter of negligible resistance and an external resistor. External resistors of various different values are used.

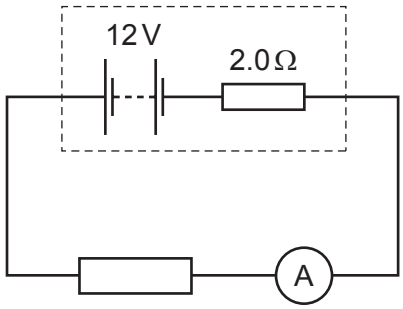

Which combination of current and resistor value is **not** correct?

	current / A	external resistor value / Ω
A	1.0	10
B	1.2	8
C	1.5	6
D	1.8	4

Space for working

34 A wire PQ is made of three different materials, with resistivities ρ, 2ρ and 3ρ. There is a current I in this composite wire, as shown.

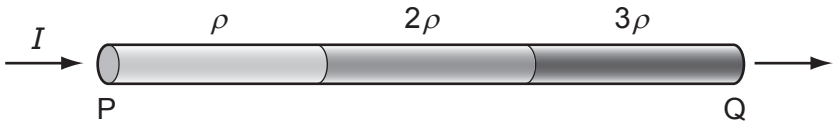

Which graph best shows how the potential V along the wire varies with distance x from P?

A

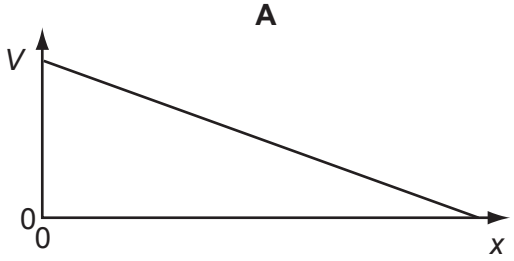

B

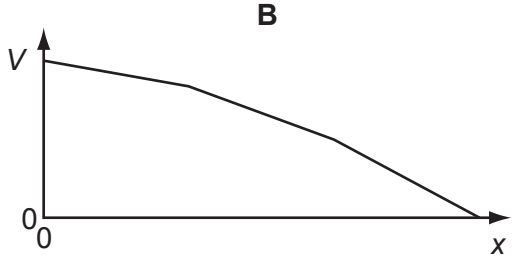

C

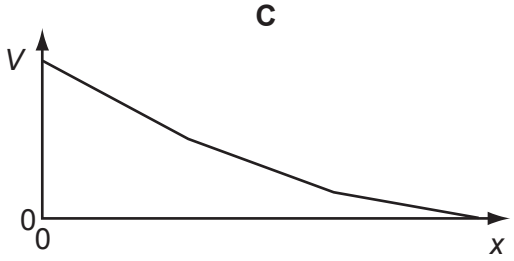

D

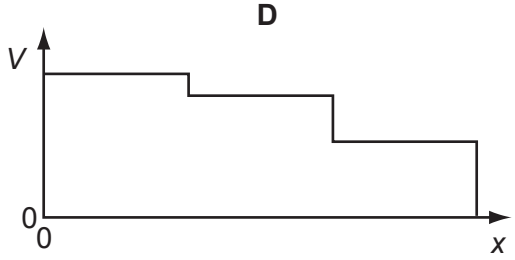

Space for working

© UCLES 2010

35 The diagram shows part of a circuit.

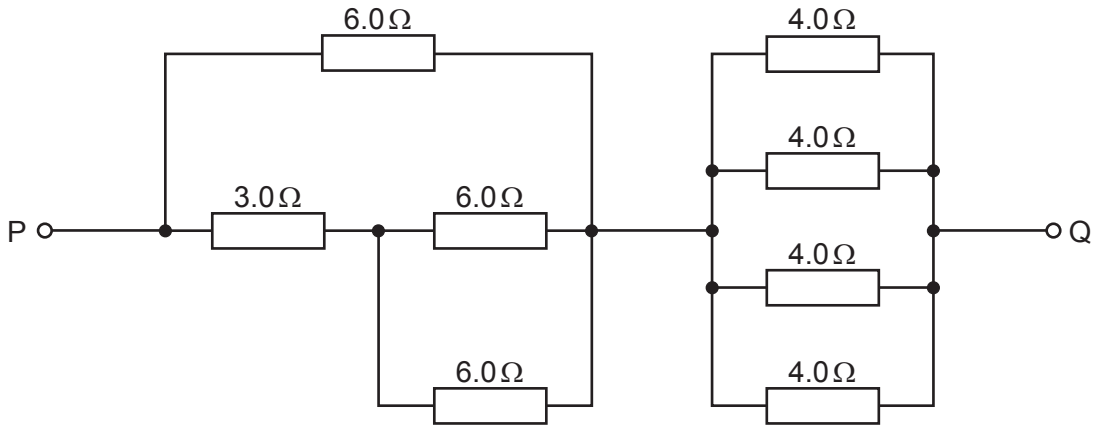

What is the resistance between the points P and Q due to the resistance network?

A 1.3Ω **B** 4.0Ω **C** 10Ω **D** 37Ω

Space for working

36 The diagram shows a potential divider circuit.

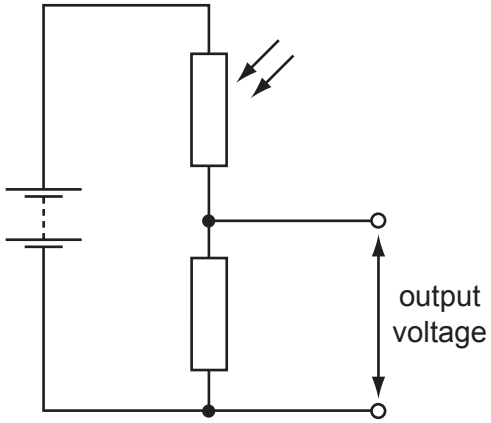

The light level increases.

What is the effect on the resistance of the light-dependent resistor (LDR) and on the output voltage?

	resistance of the LDR	output voltage
A	decreases	decreases
B	decreases	increases
C	increases	decreases
D	increases	increases

37 Three resistors, with resistances R_1, R_2 and R_3, are connected in series and are found to have a combined resistance of 500 Ω. When connected in parallel, the combined resistance is found to be 50 Ω.

Which values will correspond to these results?

	R_1 / Ω	R_2 / Ω	R_3 / Ω
A	160	160	80
B	200	200	100
C	225	225	50
D	230	230	40

Space for working

© UCLES 2010

38 In the Rutherford scattering experiment, α-particles were fired at a thin gold foil. A small proportion of the α-particles were deflected through large angles.

Which statement gives the correct conclusion that could be drawn directly from these results?

A The atom is made up of electrons, protons and neutrons.

B The nucleus is at the centre of the atom.

C The nucleus is made up of protons and neutrons.

D The atom contains a very small, charged nucleus.

39 Which statement about the nuclei of the atoms of an element is correct?

A Every nucleus of an element contains an equal number of neutrons and protons.

B Every nucleus of an element contains the same number of neutrons as all others of that element, but the number of protons may differ.

C Every nucleus of an element contains the same number of protons as all others of that element, but the number of neutrons may differ.

D The number of protons in a nucleus differs from isotope to isotope of an element, as do the number of neutrons.

Space for working

40 A counter recording radioactive decays from a radioactive source gives the following counts in equal intervals of time.

time / min	counts
0–10	424
10–20	395
20–30	413
30–40	363
40–50	366
50–60	294
60–70	301
70–80	253
80–90	212

What can be deduced from these readings?

A that radioactivity is random and that the half-life is 90 minutes

B that radioactivity is random and that the half-life is uncertain

C that radioactivity is spontaneous and that the half-life is 90 minutes

D that radioactivity is spontaneous and that the half-life is uncertain

Space for working

Permission to reproduce items where third-party owned material protected by copyright is included has been sought and cleared where possible. Every reasonable effort has been made by the publisher (UCLES) to trace copyright holders, but if any items requiring clearance have unwittingly been included, the publisher will be pleased to make amends at the earliest possible opportunity.

University of Cambridge International Examinations is part of the Cambridge Assessment Group. Cambridge Assessment is the brand name of University of Cambridge Local Examinations Syndicate (UCLES), which is itself a department of the University of Cambridge.

© UCLES 2010